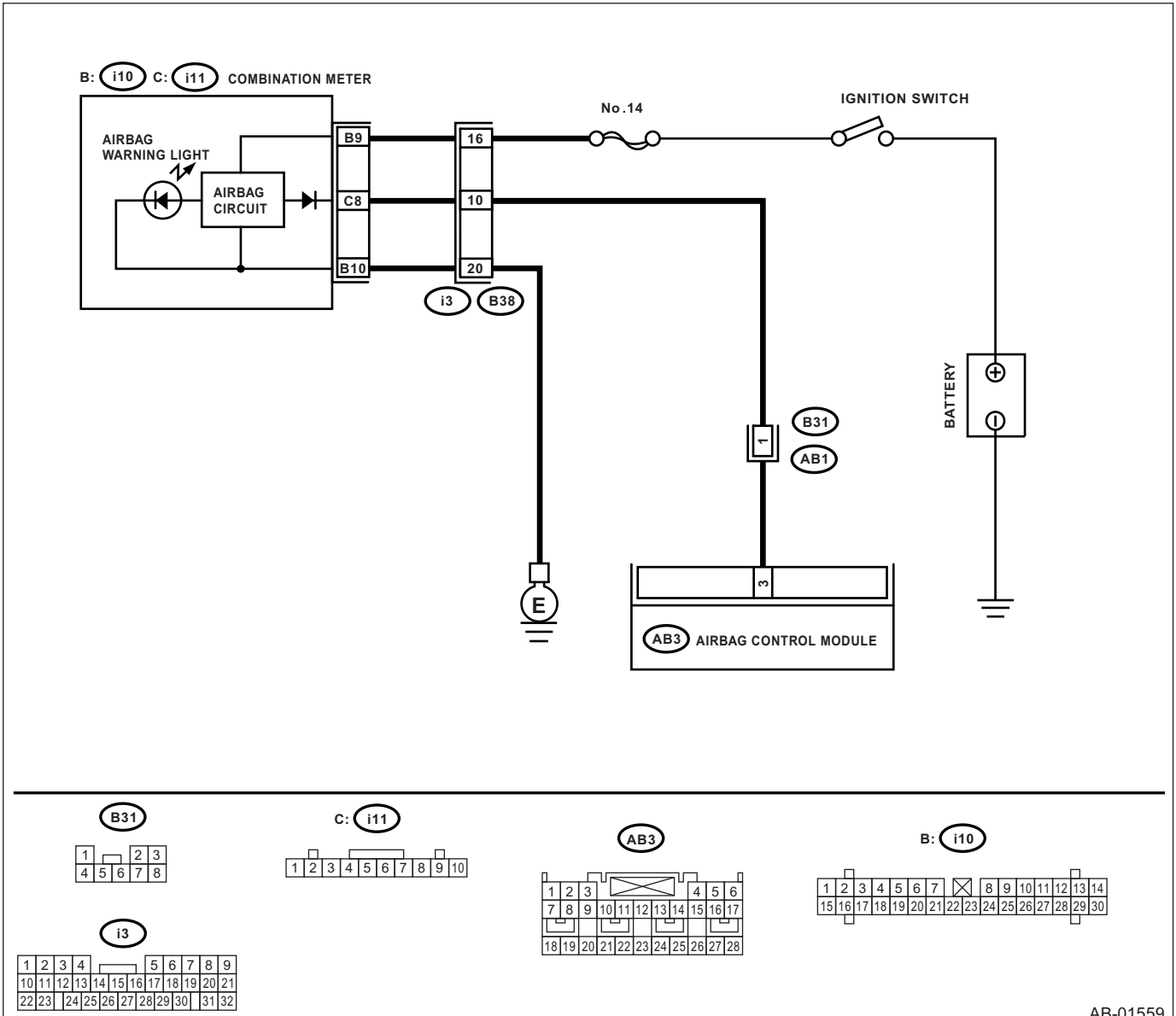
B: i10 C: i11 COMBINATION METER
AIRBAG WARNING LIGHT
AIRBAG CIRCUIT
B9
C8
B10
16
10
20
No.14
IGNITION SWITCH
i3
B38
B31
AB1
1
BATTERY
E
3
AB3 AIRBAG CONTROL MODULE
B31
C: i11
AB3
B: i10
i3
AB-01559