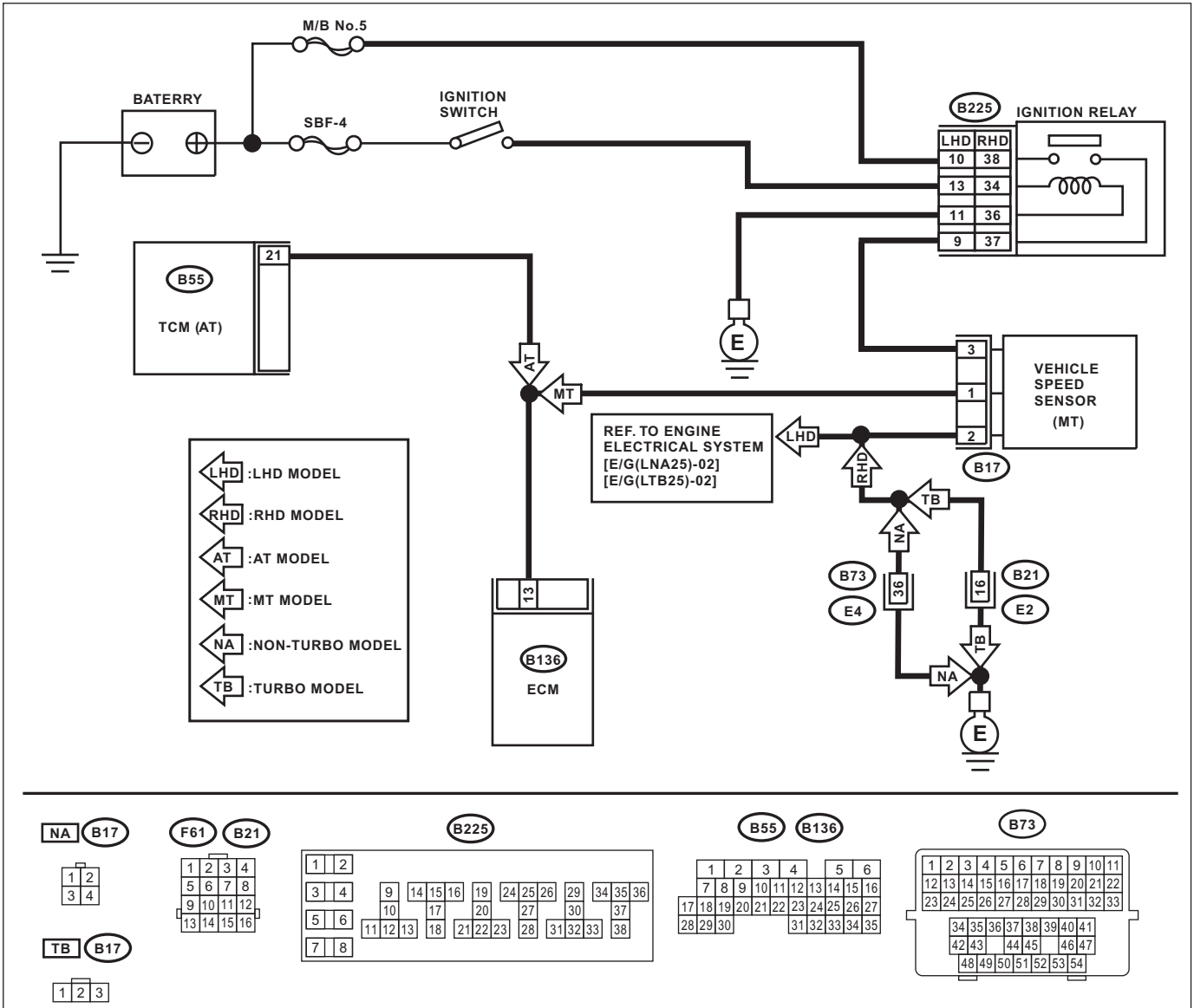
M/B No.5
BATERRY
SBF-4
IGNITION SWITCH
B225
IGNITION RELAY
LHD
RHD
10
38
13
34
11
36
9
37
B55
TCM (AT)
21
E
AT
MT
3
1
2
VEHICLE SPEED SENSOR (MT)
REF. TO ENGINE ELECTRICAL SYSTEM [E/G(LNA25)-02] [E/G(LTB25)-02]
LHD
RHD
B17
TB
NA
B73
E4
36
16
B21
E2
TB
NA
E
13
B136
ECM
LHD :LHD MODEL
RHD :RHD MODEL
AT :AT MODEL
MT :MT MODEL
NA :NON-TURBO MODEL
TB :TURBO MODEL
NA B17
TB B17
F61 B21
B225
B55 B136
B73
CC-00468