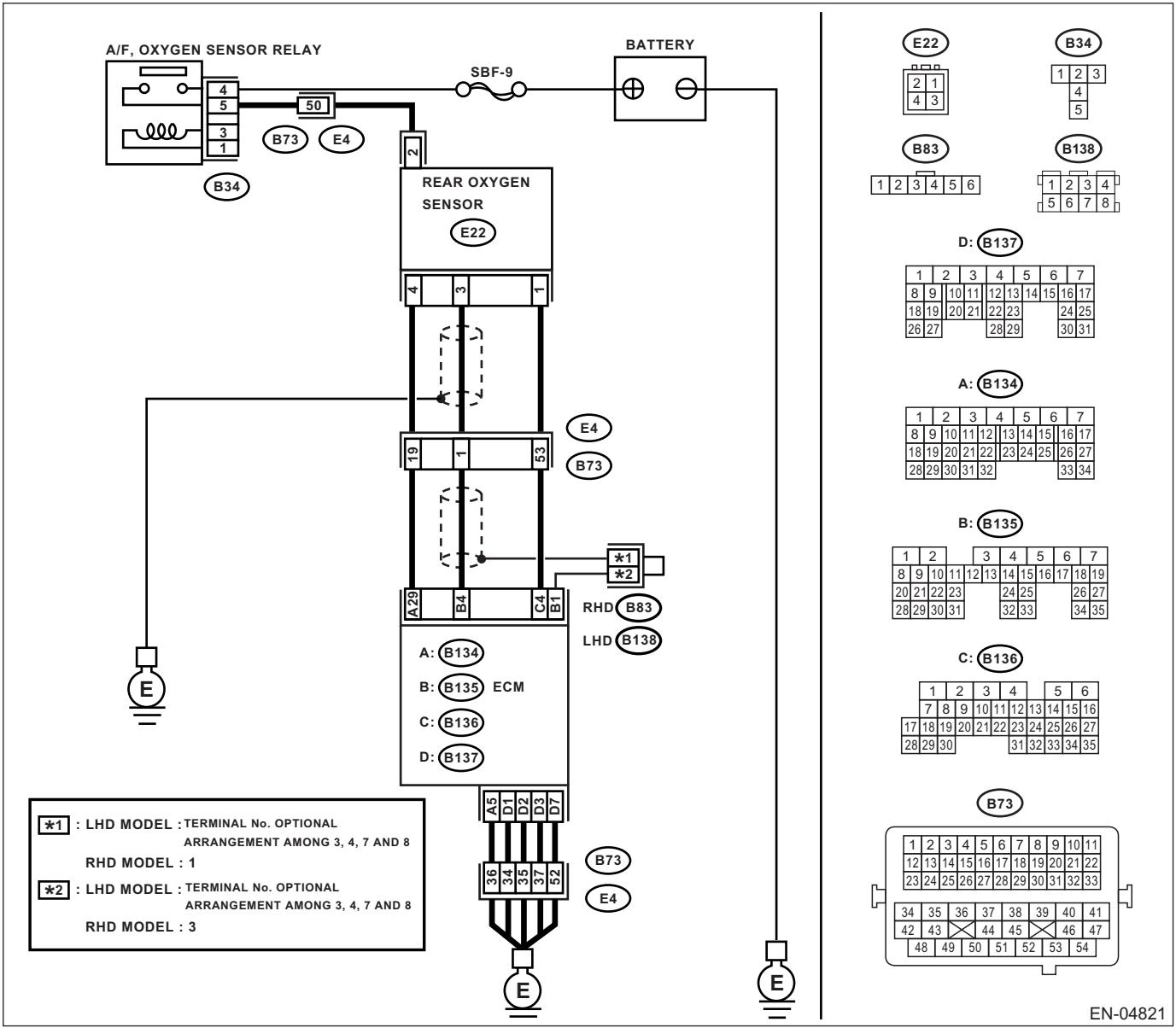
A/F, OXYGEN SENSOR RELAY
BATTERY
SBF-9
50
B73
E4
B34
REAR OXYGEN SENSOR
E22
E4
B73
*1
*2
RHD B83
LHD B138
A: B134
B: B135 ECM
C: B136
D: B137
B73
E4
E
*1 : LHD MODEL : TERMINAL No. OPTIONAL ARRANGEMENT AMONG 3, 4, 7 AND 8
RHD MODEL : 1
*2 : LHD MODEL : TERMINAL No. OPTIONAL ARRANGEMENT AMONG 3, 4, 7 AND 8
RHD MODEL : 3
E22
B34
B83
B138
D: B137
A: B134
B: B135
C: B136
B73
EN-04821