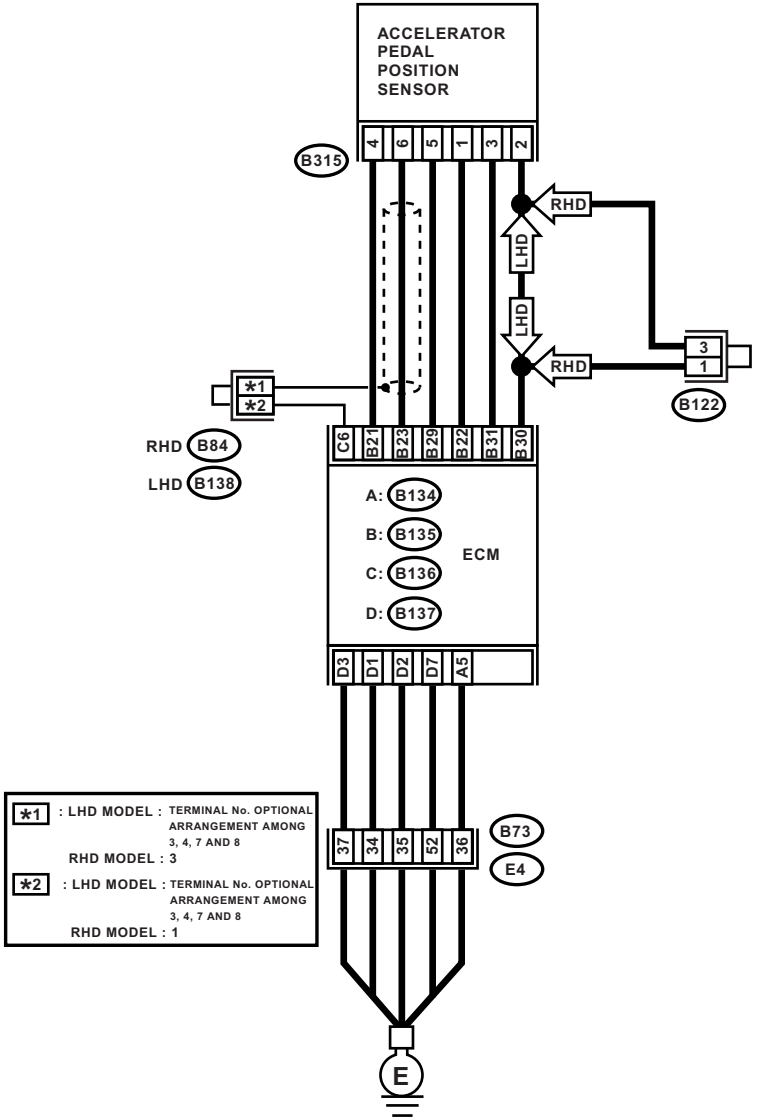
ACCELERATOR PEDAL POSITION SENSOR
B315
4 6 5 1 3 2
RHD
LHD
LHD
RHD
3
1
B122
*1
*2
RHD B84
LHD B138
C6 B21 B23 B29 B22 B31 B30
A: B134
B: B135
C: B136
D: B137
ECM
D3 D1 D2 D7 A5
37 34 35 52 36
B73
E4
E
*1 : LHD MODEL : TERMINAL No. OPTIONAL ARRANGEMENT AMONG 3, 4, 7 AND 8
RHD MODEL : 3
*2 : LHD MODEL : TERMINAL No. OPTIONAL ARRANGEMENT AMONG 3, 4, 7 AND 8
RHD MODEL : 1

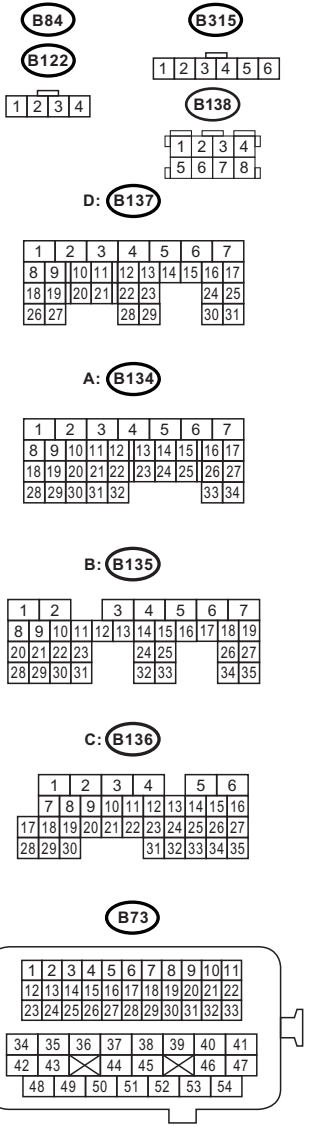
B84
B122
1 2 3 4
B315
1 2 3 4 5 6
B138
1 2 3 4
5 6 7 8
D: B137
A: B134
B: B135
C: B136
B73

EN-04829