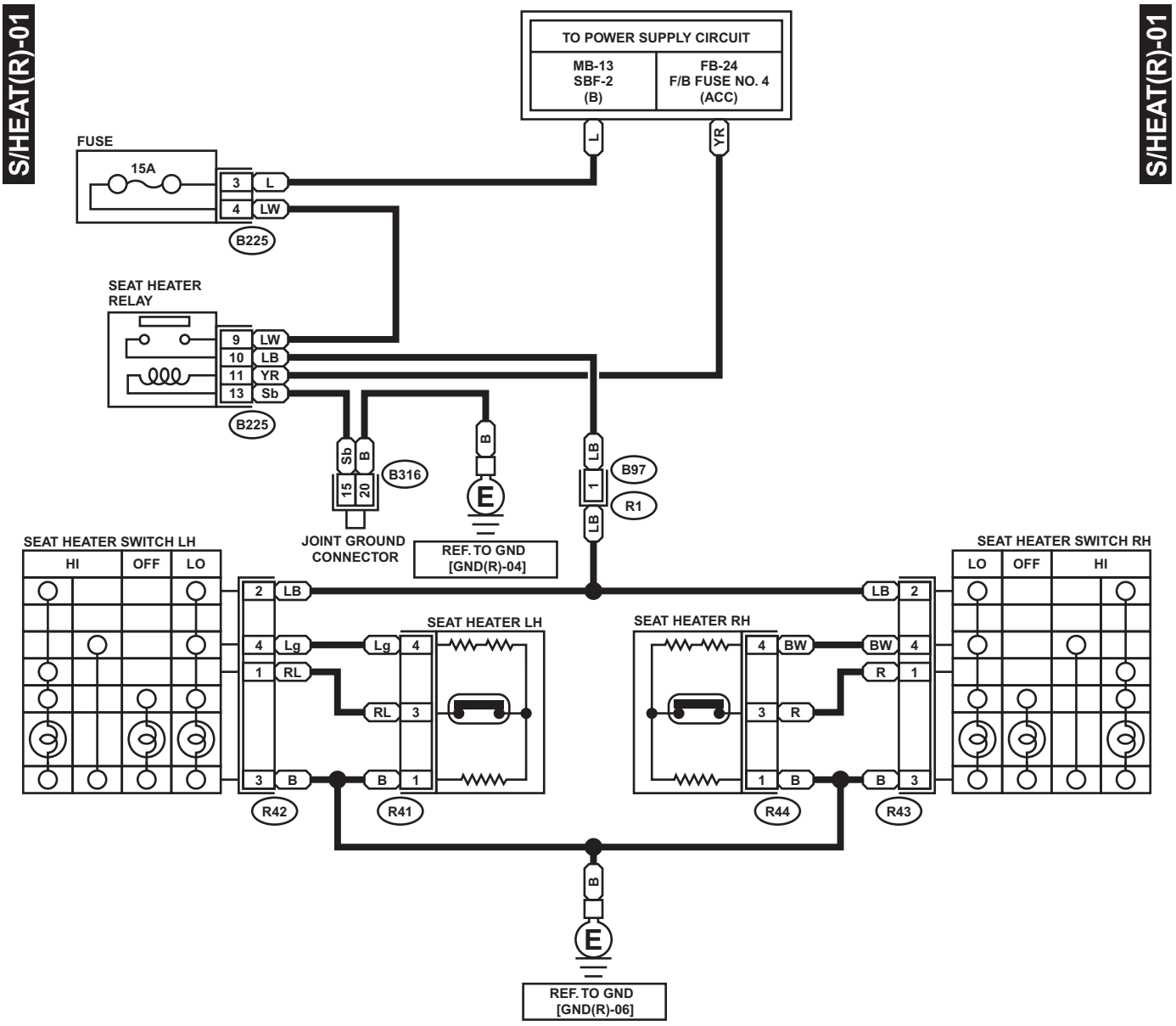

R43

R41 (BLUE)

R42 (BLUE)

R44 (BLUE)

B97 (BLACK)

B316

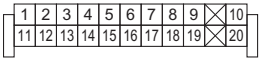

B225 (BLACK)

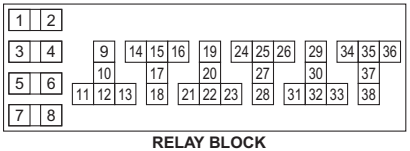

RELAY BLOCK