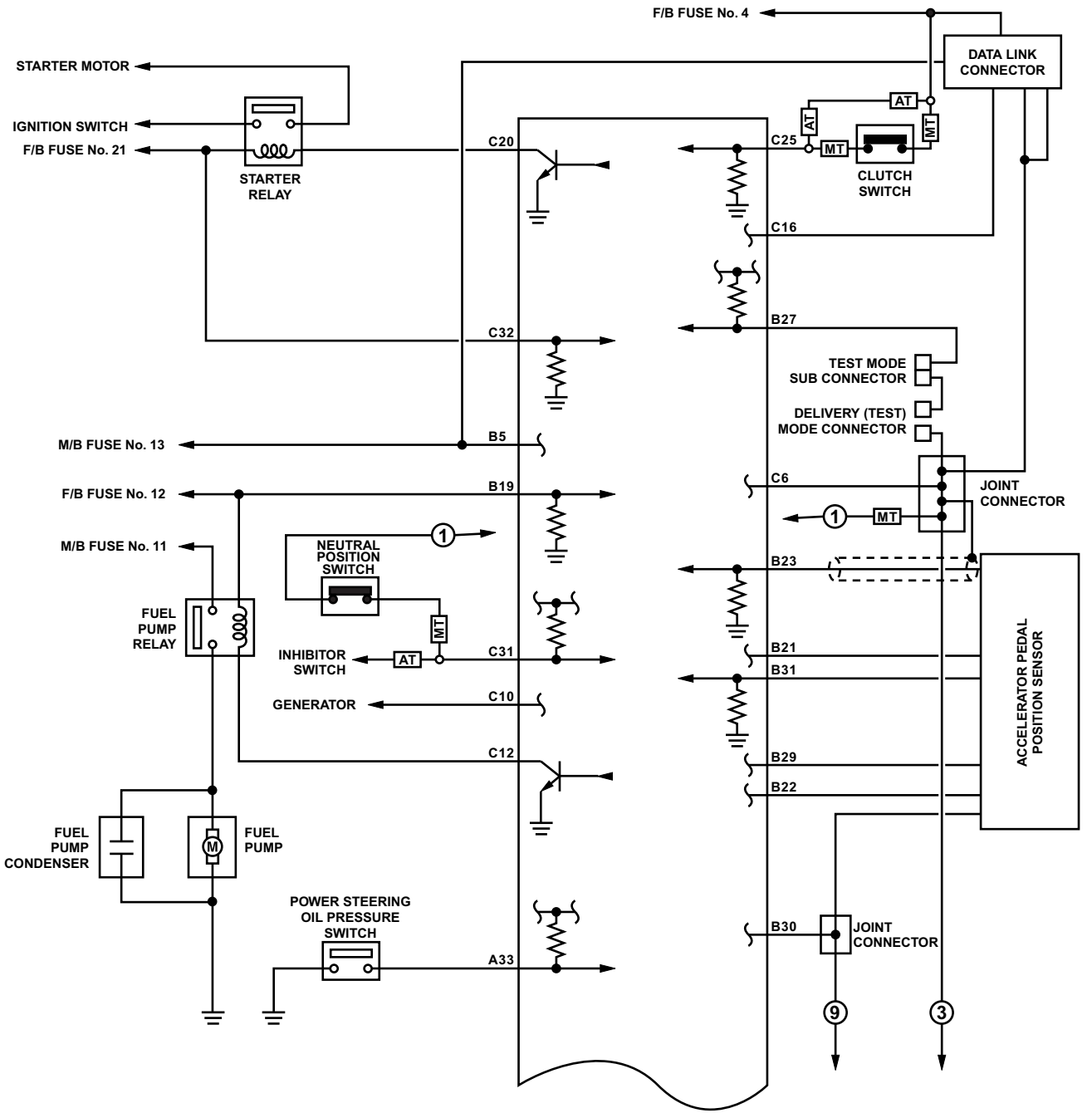
F/B FUSE No. 4
DATA LINK CONNECTOR
STARTER MOTOR
IGNITION SWITCH
F/B FUSE No. 21
STARTER RELAY
C20
C25
AT
MT
CLUTCH SWITCH
C16
B27
C32
TEST MODE SUB CONNECTOR
DELIVERY (TEST) MODE CONNECTOR
M/B FUSE No. 13
B5
F/B FUSE No. 12
B19
C6
JOINT CONNECTOR
1
M/B FUSE No. 11
NEUTRAL POSITION SWITCH
B23
FUEL PUMP RELAY
INHIBITOR SWITCH
C31
B21
B31
GENERATOR
C10
ACCELERATOR PEDAL POSITION SENSOR
C12
B29
B22
FUEL PUMP CONDENSER
FUEL PUMP
M
POWER STEERING OIL PRESSURE SWITCH
A33
B30
JOINT CONNECTOR
9
3

EN-06674