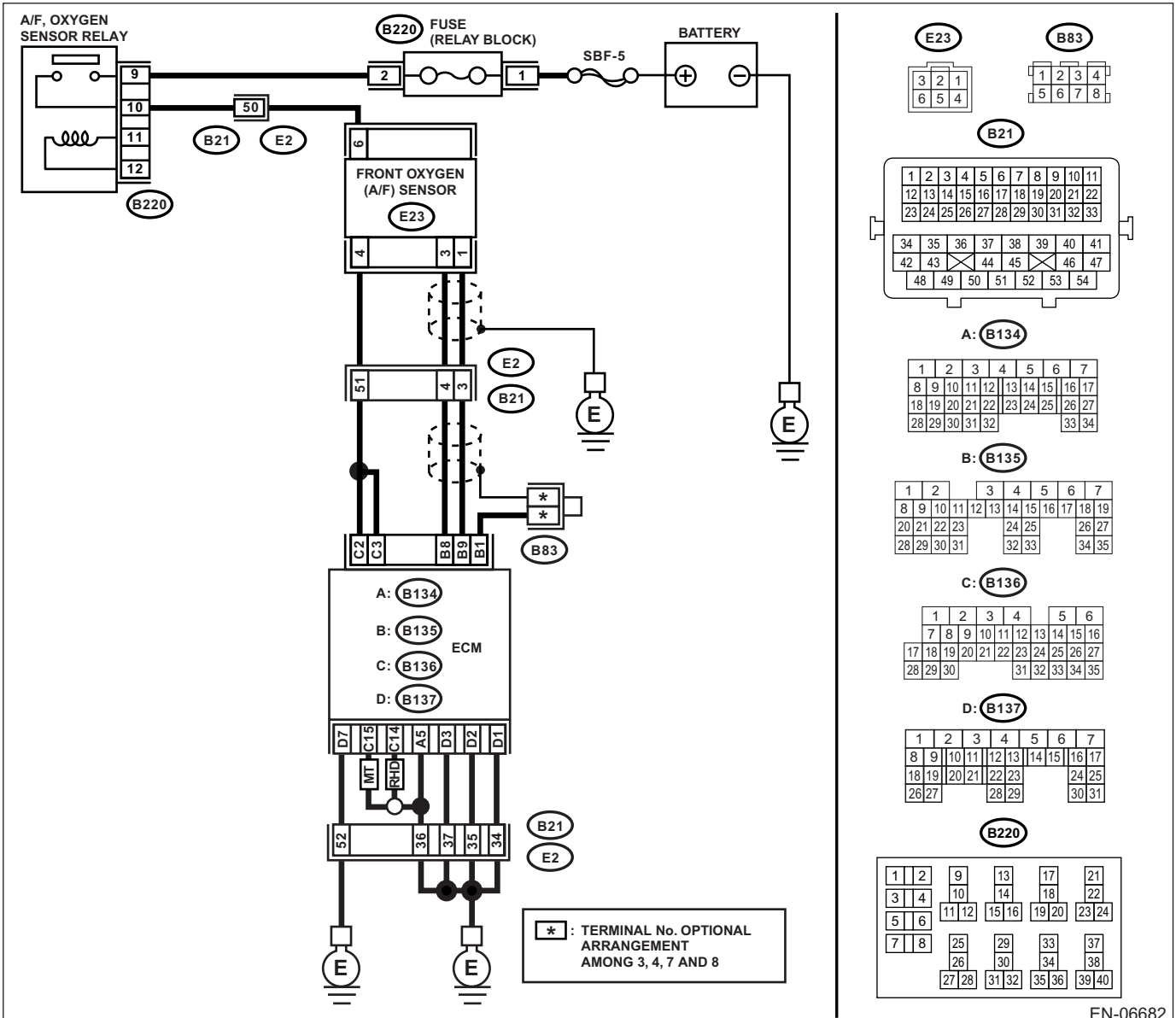
A/F, OXYGEN SENSOR RELAY
B220
FUSE (RELAY BLOCK)
BATTERY
SBF-5
50
B21
E2
FRONT OXYGEN (A/F) SENSOR
E23
B83
A: B134
B: B135
C: B136
D: B137
ECM
MT
RHD
E
* : TERMINAL No. OPTIONAL ARRANGEMENT AMONG 3, 4, 7 AND 8
EN-06682