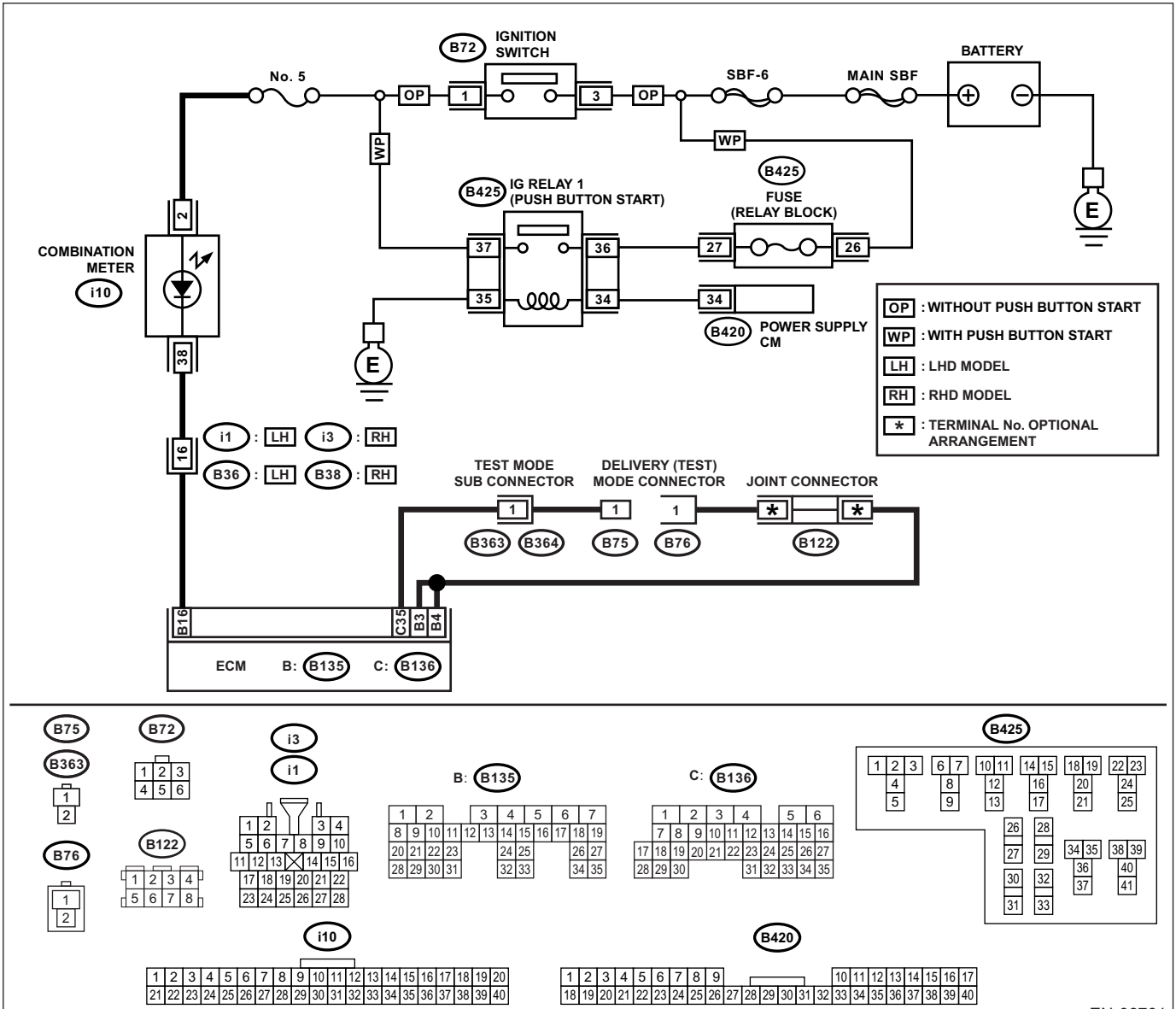
B72
IGNITION SWITCH
No. 5
OP
1
3
OP
SBF-6
MAIN SBF
BATTERY
WP
WP
B425
IG RELAY 1 (PUSH BUTTON START)
B425
FUSE (RELAY BLOCK)
2
COMBINATION METER
i10
37
36
27
26
35
34
34
B420
POWER SUPPLY CM
E
E
38
16
i1 : LH
i3 : RH
B36 : LH
B38 : RH
TEST MODE SUB CONNECTOR
DELIVERY (TEST) MODE CONNECTOR
JOINT CONNECTOR
1
1
1
*
*
B363
B364
B75
B76
B122
B16
C35
B3
B4
ECM
B: B135
C: B136
OP : WITHOUT PUSH BUTTON START
WP : WITH PUSH BUTTON START
LH : LHD MODEL
RH : RHD MODEL
* : TERMINAL No. OPTIONAL ARRANGEMENT
B75
B363
B72
B76
B122
i3
i1
B: B135
C: B136
B425
i10
B420
EN-06701