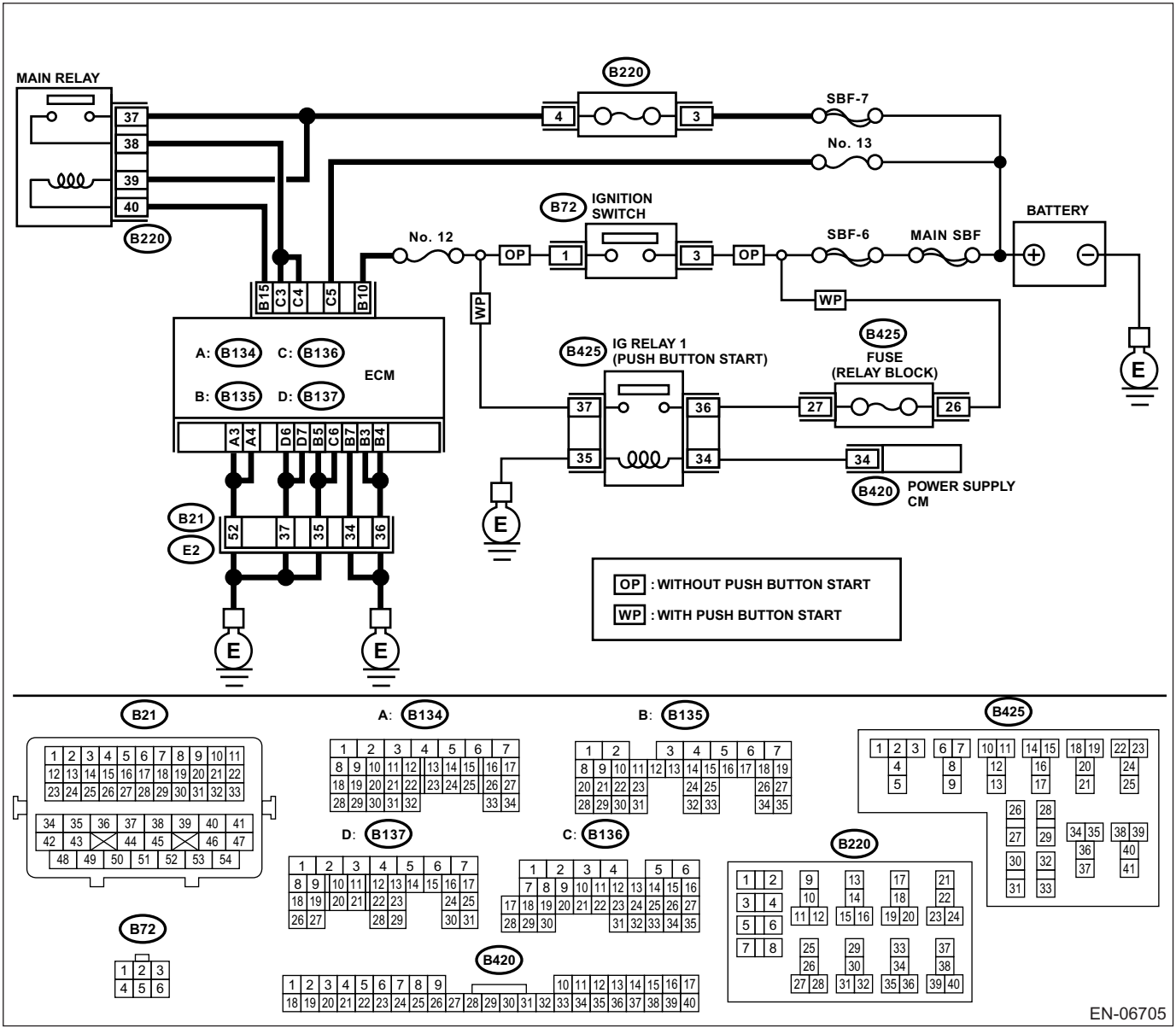
MAIN RELAY
37
38
39
40
B220
B220
4
3
SBF-7
No. 13
B72
IGNITION SWITCH
No. 12
OP
1
3
OP
SBF-6
MAIN SBF
BATTERY
WP
WP
B15
C3
C4
C5
B10
A: B134
C: B136
B: B135
D: B137
ECM
A3
A4
D6
D7
B5
C6
B7
B3
B4
B425
IG RELAY 1 (PUSH BUTTON START)
37
36
35
34
B425
FUSE (RELAY BLOCK)
27
26
34
B420
POWER SUPPLY CM
E
B21
E2
52
37
35
34
36
E
E
E
OP : WITHOUT PUSH BUTTON START
WP : WITH PUSH BUTTON START
B21
B72
A: B134
B: B135
B425
D: B137
C: B136
B220
B420
EN-06705