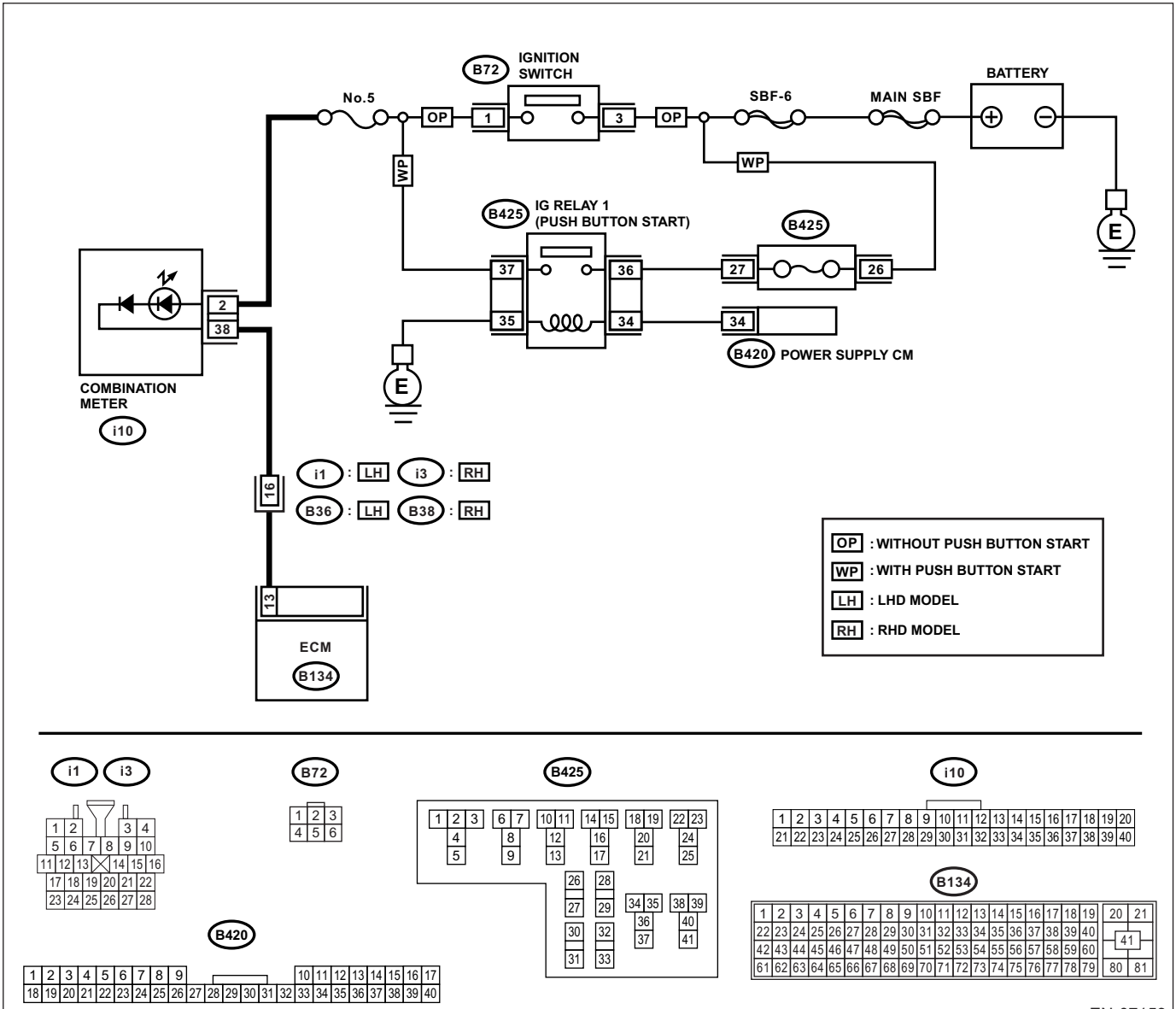
B72
IGNITION SWITCH
No.5
OP
1
3
OP
SBF-6
MAIN SBF
BATTERY
WP
WP
B425
IG RELAY 1 (PUSH BUTTON START)
B425
37
36
27
26
35
34
34
B420
POWER SUPPLY CM
E
E
2
38
COMBINATION METER
i10
16
i1 : LH
i3 : RH
B36 : LH
B38 : RH
13
ECM
B134
OP : WITHOUT PUSH BUTTON START
WP : WITH PUSH BUTTON START
LH : LHD MODEL
RH : RHD MODEL
i1
i3
B72
B425
i10
B420
B134
EN-07159