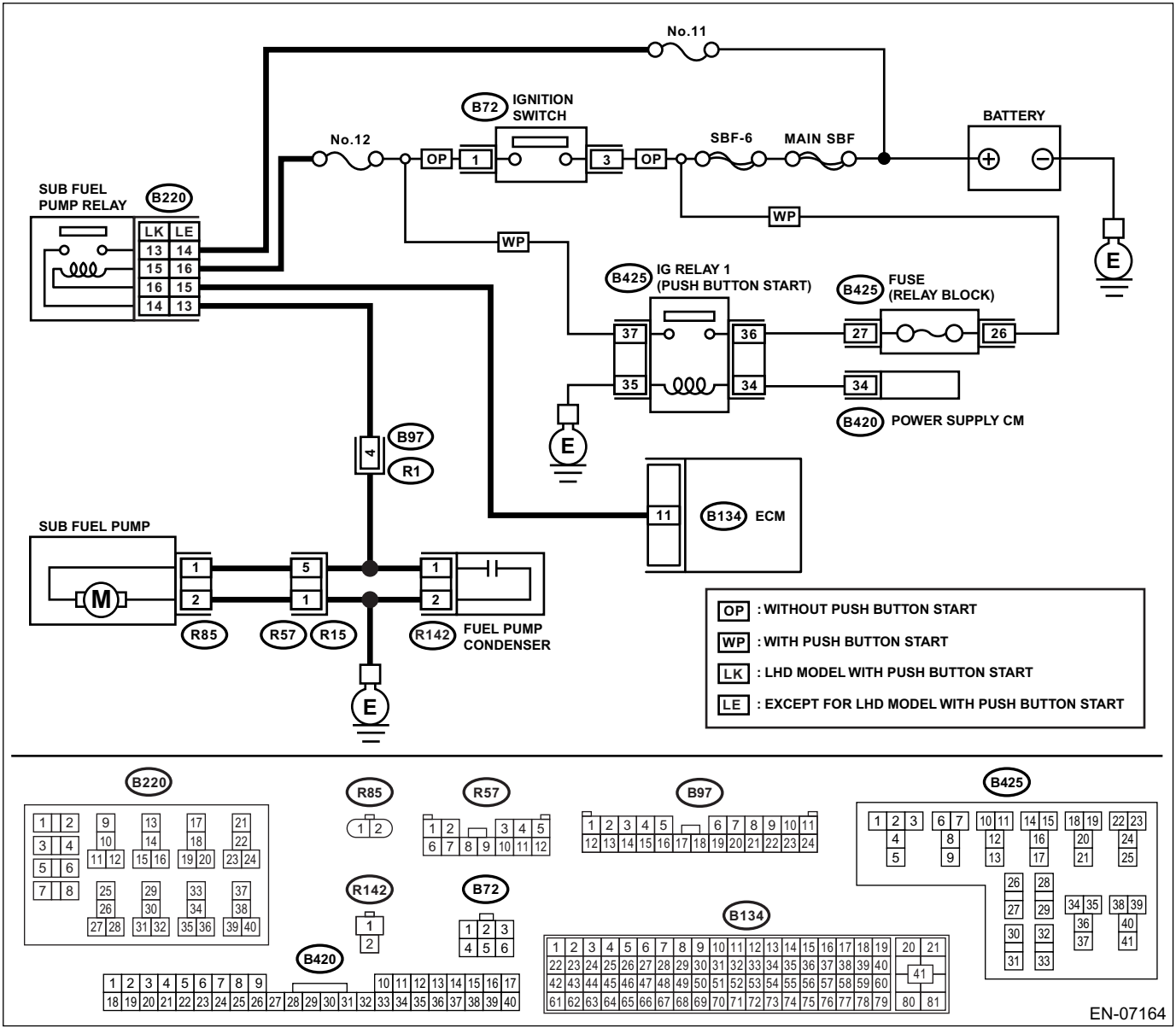
No.11
B72
IGNITION SWITCH
BATTERY
No.12
OP
1
3
OP
SBF-6
MAIN SBF
SUB FUEL PUMP RELAY
B220
LK
LE
13
14
15
16
16
15
14
13
WP
WP
E
B425
IG RELAY 1 (PUSH BUTTON START)
B425
FUSE (RELAY BLOCK)
37
36
27
26
35
34
34
B420
POWER SUPPLY CM
E
B97
4
R1
11
B134
ECM
SUB FUEL PUMP
M
1
2
5
1
1
2
R85
R57
R15
R142
FUEL PUMP CONDENSER
E
OP : WITHOUT PUSH BUTTON START
WP : WITH PUSH BUTTON START
LK : LHD MODEL WITH PUSH BUTTON START
LE : EXCEPT FOR LHD MODEL WITH PUSH BUTTON START
B220
R85
R57
B97
B425
R142
B72
B134
B420
EN-07164