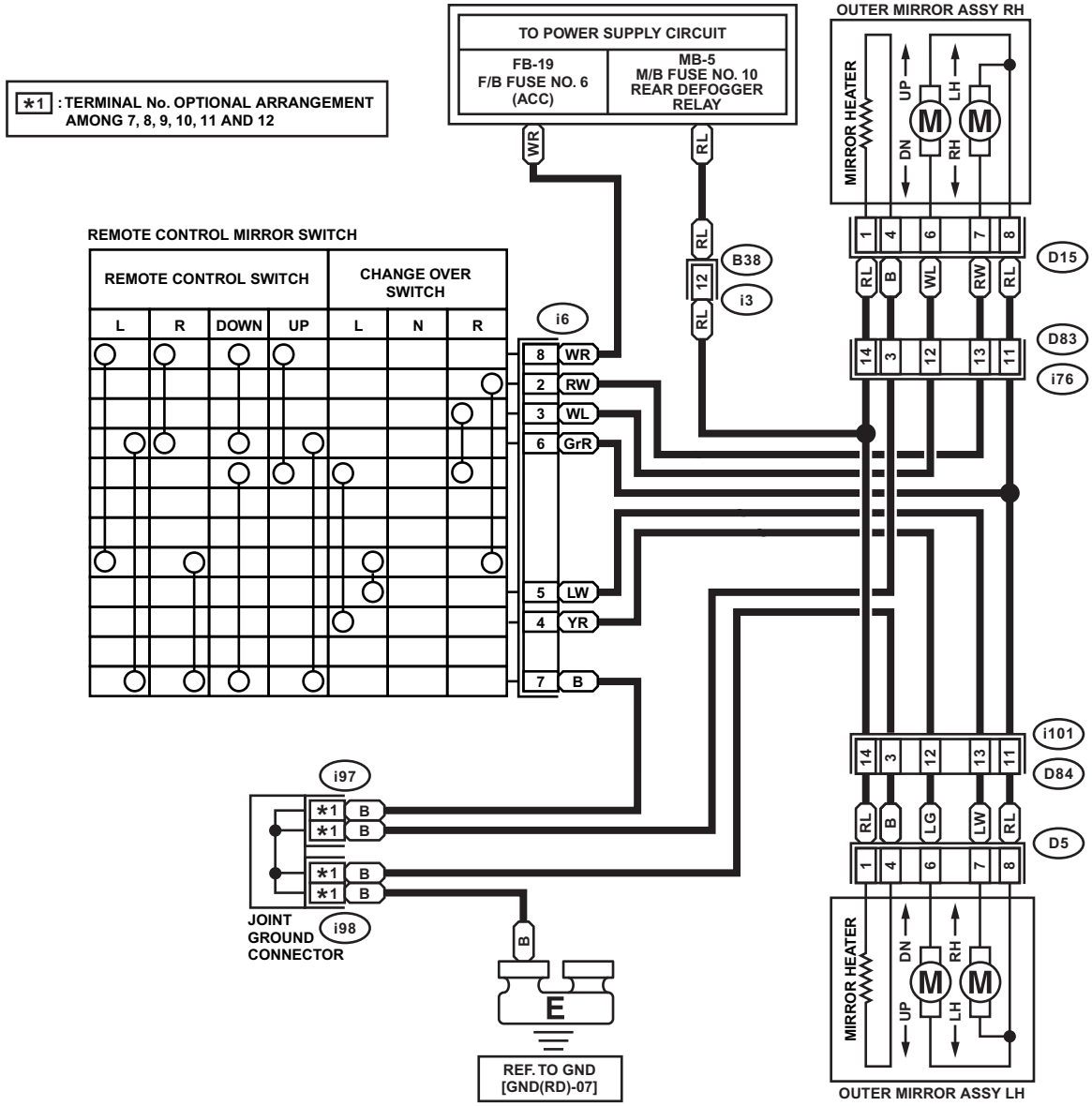
TO POWER SUPPLY CIRCUIT
FB-19
F/B FUSE NO. 6
(ACC)
MB-5
M/B FUSE NO. 10
REAR DEFOGGER
RELAY
*1 : TERMINAL No. OPTIONAL ARRANGEMENT AMONG 7, 8, 9, 10, 11 AND 12
OUTER MIRROR ASSY RH
MIRROR HEATER
UP
DN
LH
RH
M
WR
RL
B38
i3
D15
D83
i76
REMOTE CONTROL MIRROR SWITCH
REMOTE CONTROL SWITCH
CHANGE OVER SWITCH
L
R
DOWN
UP
L
N
R
i6
WR
RW
WL
GrR
LW
YR
B
i101
D84
D5
i97
i98
JOINT GROUND CONNECTOR
LG
E
REF. TO GND
[GND(RD)-07]
OUTER MIRROR ASSY LH

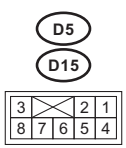
D5
D15

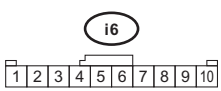
i6

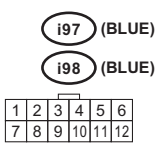
i97 (BLUE)
i98 (BLUE)

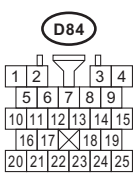
D84

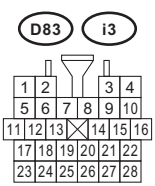
D83
i3