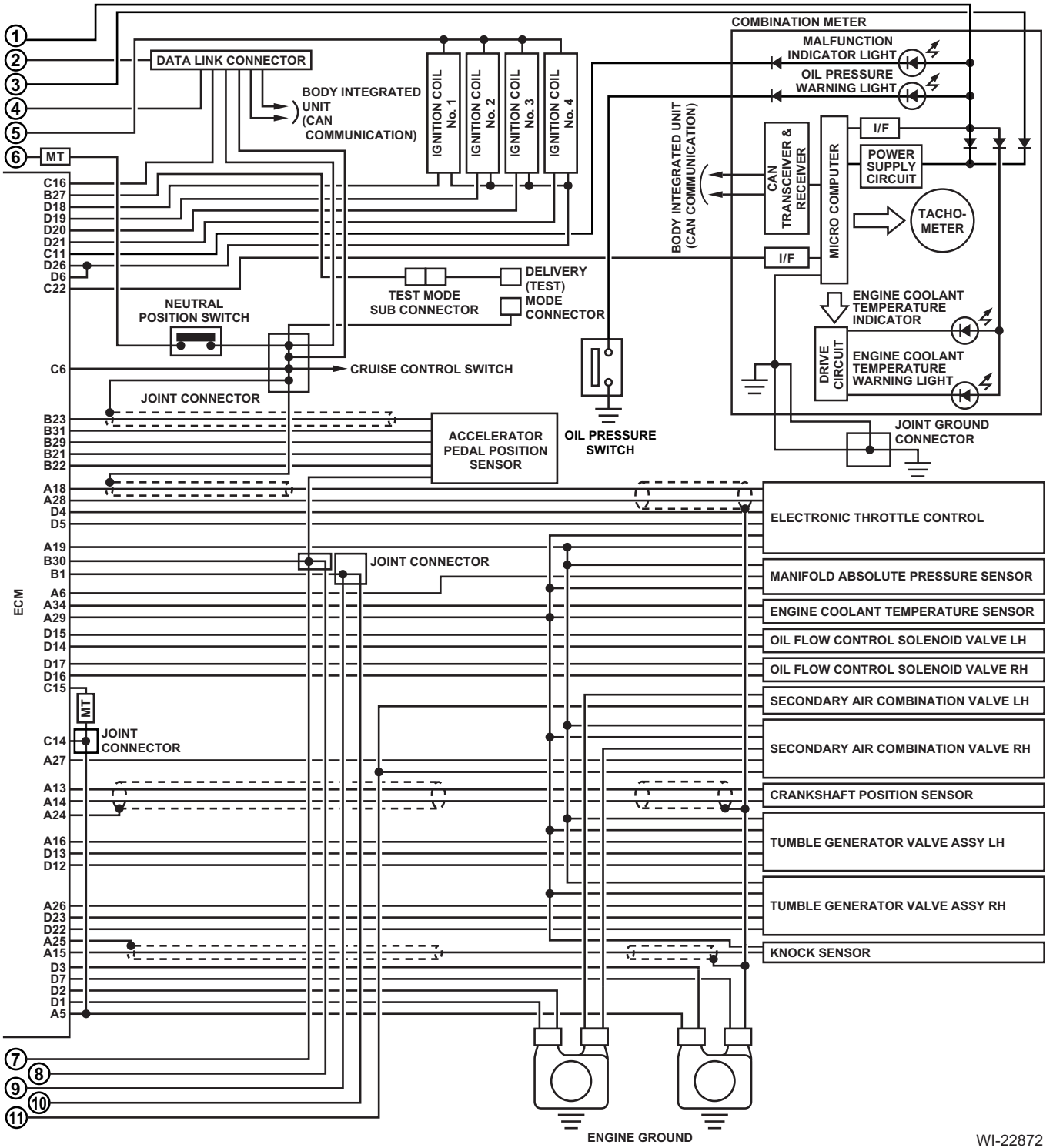
COMBINATION METER
MALFUNCTION INDICATOR LIGHT
OIL PRESSURE WARNING LIGHT
DATA LINK CONNECTOR
BODY INTEGRATED UNIT (CAN COMMUNICATION)
IGNITION COIL No. 1
IGNITION COIL No. 2
IGNITION COIL No. 3
IGNITION COIL No. 4
BODY INTEGRATED UNIT (CAN COMMUNICATION)
CAN TRANSCEIVER & RECEIVER
MICRO COMPUTER
I/F
POWER SUPPLY CIRCUIT
TACHO-METER
I/F
MT
C16
B27
D18
D19
D20
D21
C11
D26
D6
C22
TEST MODE SUB CONNECTOR
DELIVERY (TEST) MODE CONNECTOR
NEUTRAL POSITION SWITCH
ENGINE COOLANT TEMPERATURE INDICATOR
DRIVE CIRCUIT
ENGINE COOLANT TEMPERATURE WARNING LIGHT
C6
CRUISE CONTROL SWITCH
JOINT CONNECTOR
B23
B31
B29
B21
B22
ACCELERATOR PEDAL POSITION SENSOR
OIL PRESSURE SWITCH
JOINT GROUND CONNECTOR
A18
A28
D4
D5
ELECTRONIC THROTTLE CONTROL
A19
B30
B1
JOINT CONNECTOR
MANIFOLD ABSOLUTE PRESSURE SENSOR
A6
A34
A29
ENGINE COOLANT TEMPERATURE SENSOR
D15
D14
OIL FLOW CONTROL SOLENOID VALVE LH
D17
D16
OIL FLOW CONTROL SOLENOID VALVE RH
C15
SECONDARY AIR COMBINATION VALVE LH
MT
C14
JOINT CONNECTOR
A27
SECONDARY AIR COMBINATION VALVE RH
A13
A14
A24
CRANKSHAFT POSITION SENSOR
A16
D13
D12
TUMBLE GENERATOR VALVE ASSY LH
A26
D23
D22
A25
A15
TUMBLE GENERATOR VALVE ASSY RH
KNOCK SENSOR
D3
D7
D2
D1
A5
ECM
ENGINE GROUND
WI-22872