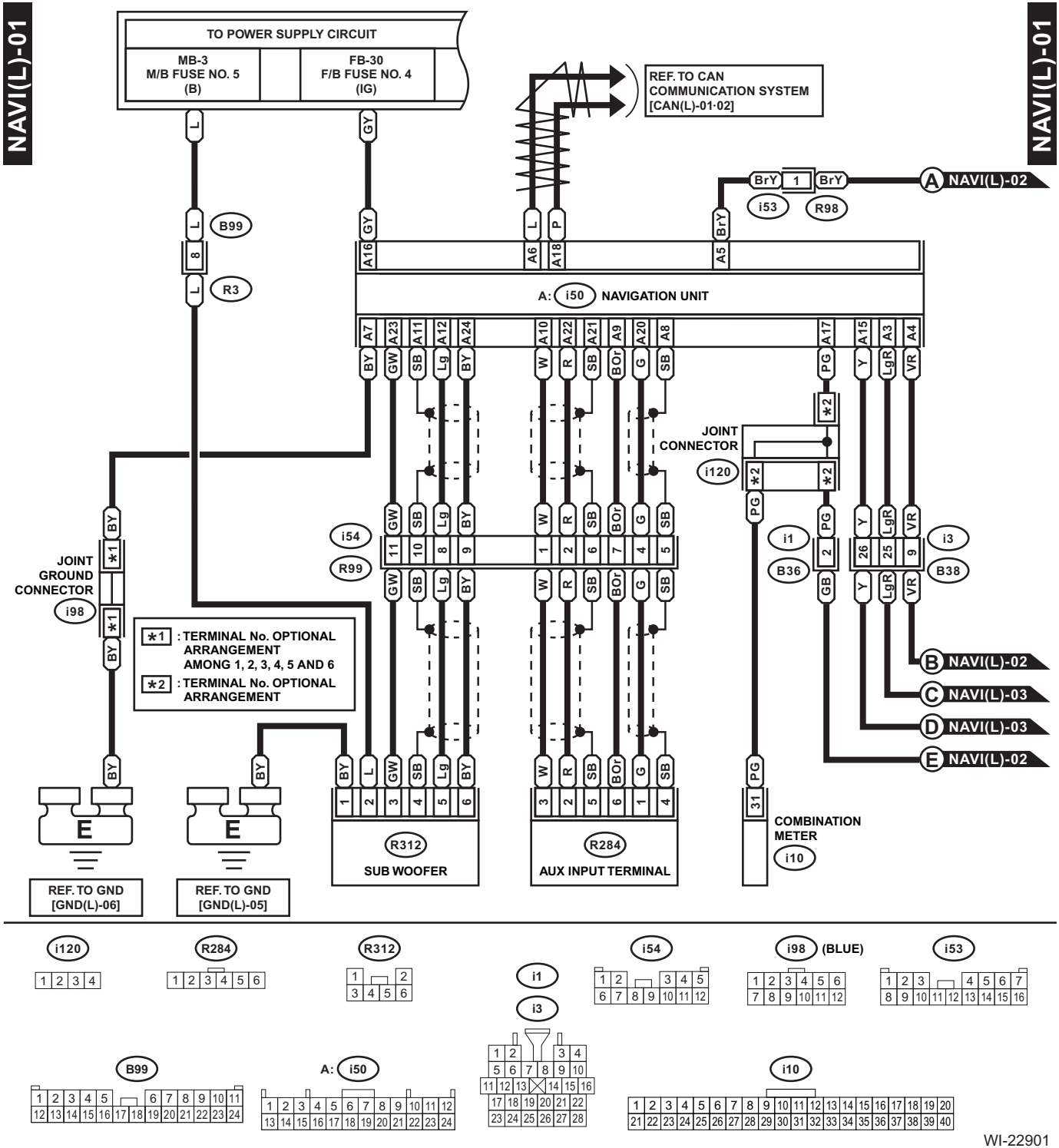
TO POWER SUPPLY CIRCUIT
MB-3
M/B FUSE NO. 5
(B)
FB-30
F/B FUSE NO. 4
(IG)
REF. TO CAN
COMMUNICATION SYSTEM
[CAN(L)-01·02]
A NAVI(L)-02
i53
R98
B99
R3
A: i50 NAVIGATION UNIT
JOINT
CONNECTOR
i120
i54
R99
i1
B36
i3
B38
JOINT
GROUND
CONNECTOR
i98
*1 : TERMINAL No. OPTIONAL ARRANGEMENT AMONG 1, 2, 3, 4, 5 AND 6
*2 : TERMINAL No. OPTIONAL ARRANGEMENT
B NAVI(L)-02
C NAVI(L)-03
D NAVI(L)-03
E NAVI(L)-02
R312
SUB WOOFER
R284
AUX INPUT TERMINAL
COMBINATION
METER
i10
REF. TO GND
[GND(L)-06]
REF. TO GND
[GND(L)-05]
i120
R284
R312
i1
i3
i54
i98 (BLUE)
i53
B99
A: i50
i10
WI-22901